contract		We agree to produce according to this drawing		
No.		Reviewer	Principal	Company
Project				
Company				

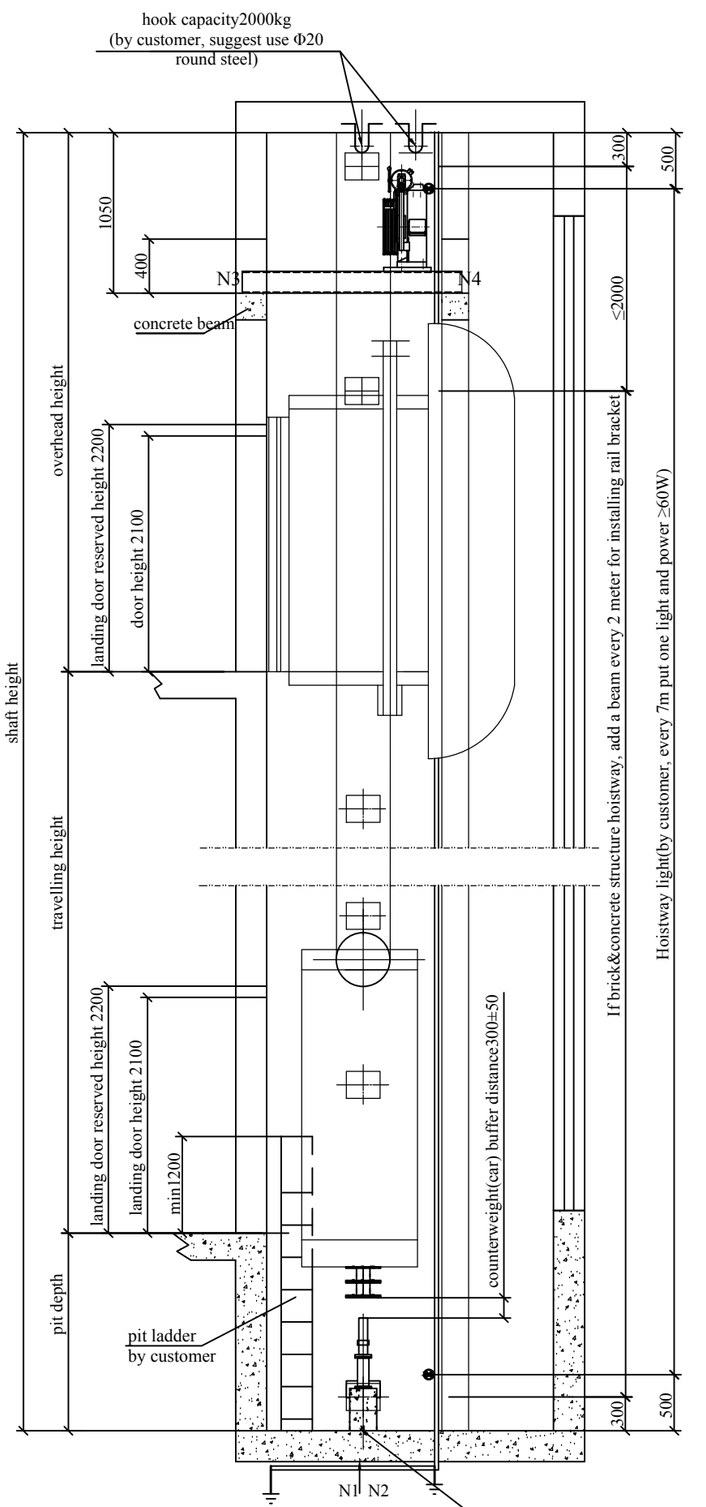

shaft,machine room
Elevation

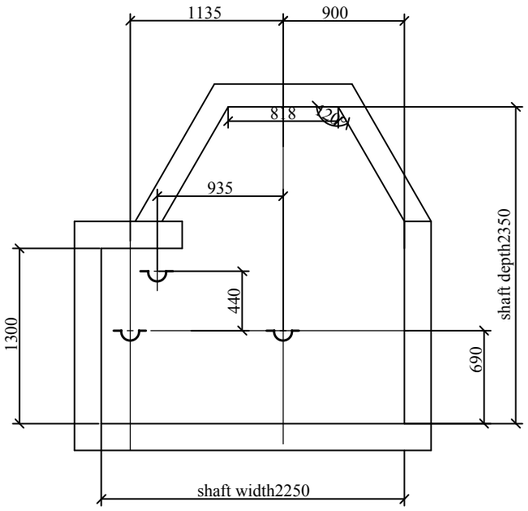

Hook horizontal projection

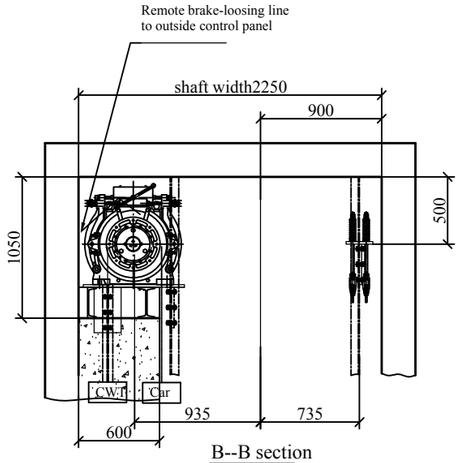

B--B section

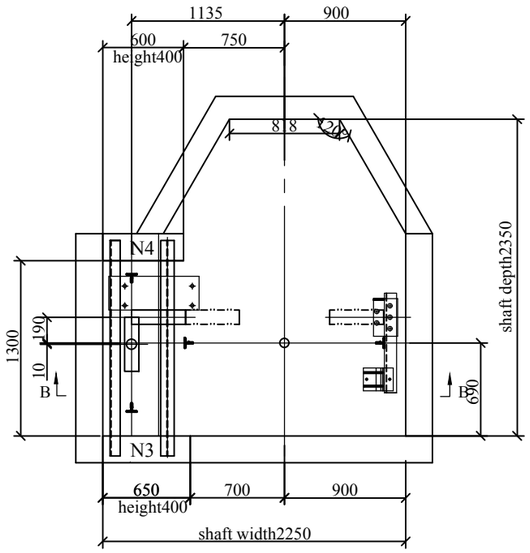

Top shaft layout

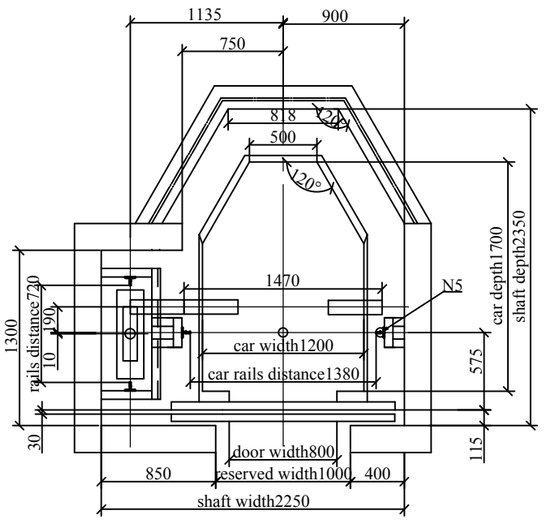

shaft layout

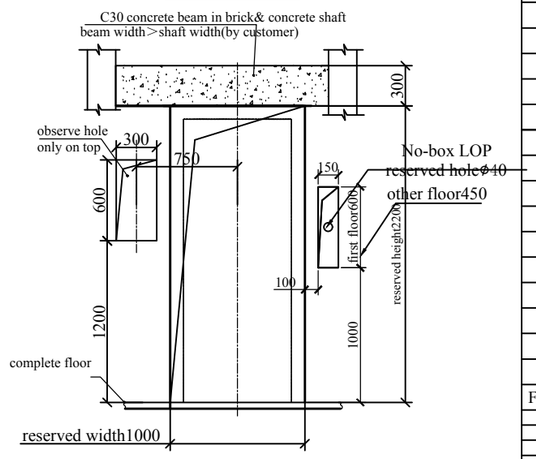

landing door hole view

Specifications

Model		TMGJ800/1.0	TMGJ800/1.5(1.75)
capacity (kg)		800	800
Speed (m/s)		1.0	1.5(1.75)
Person		10	10
door opening		Center opening	Center opening
traction pulley(mm)		φ400	φ400
car bottom pulley(mm)		φ400	φ400
counterweight pulley(mm)		φ400	φ400
Power(kw)		5.4	8.1(9.6)
current（A）		12.0	18.0(20.0)
car external dimension(mm)		1250(W)X1885(D)	1250(W)X1885(D)
car inside dimension(mm)		1200(W)X1700(D)	1200(W)X1700(D)
car height(mm)		2400	2400
landing door(mm)		800X2100	800X2100
min floor space(mm)		2750	2750
stop(floor)		16	24（32）
travel height(m)		55	85（100）
overhead height(mm)		≥4600	≥4700(4800)
pit depth(mm)		≥1800	≥1900(2000)
Power	voltage (V)	380	380
	frequent (Hz)	50	50
	capacity(kVA)	7.8	11.7(13.8)
Support (N)	N1	80000	80000
	N2	65000	65000
	N3	28000	28000
	N4	41000	41000
	N5	23000	23000

Note

1.brick and concrete shaft according to the drawing bury the steel plate in advance, plate parts please see the drawing. If not bury in advance, add beam between each floor. Guide rail support vertical distance is not over 2.0m. When the distance between two landing sills over 11m, need a safety door.
2.hoistway pit can bear the load shows in the melt pit drawing, if there's space people can reach in the pit, the other land of the pit minimum designed by 5000N/㎡ load, and counterweight buffer(N2) installed in the solid land(by client)
3. the shaft inside ambient temperature at +5~+40 ℃
4.please meet the following requirements when you use expansion bolt to install the elevator guide rail support: a. concrete wall is solid and strong, the compressive strength not below 21Mpa b. the thickness of the concrete wall over 120mm
5.Shaft should keep dry and isolate from the water tank and flue. And it should be well-ventilated. The top of the shaft should have insulating layer and enough lighting. In cold region, it should take heating into consideration.
6.working condition for elevator: A. the altitude should not higher than 1000m. B.supply voltage:relative to rated voltage, the range should be controlled in +~7% C. the average max relative humidity of the elevator working place during the wettest month should be 90%. At the same time, the lowest temperature should be less than 25 degree centigrade D. there should have no corrosive and flammable air or conductive dust in the environment.
7.the shaft should keep vertical. It only allows positive deviation. The deviation of hoistway(whose total height is ≤30m) is as flows 0-+25mm, for shaft total height ≤60m, deviation is 0-35mm, for shaft total height ≤90m, deviation is 0-50mm.
8. the door size is the one after decoration. So there should have a slack in the building. And doing the decoration after installing the door. The power supply of cabin are all provided by the customer.
9. If there is equipment like water pipe, the customer should negotiate with our company in advance. The entrance of the room should be clear. The width for aisle and stair to the room should not be less than 1200mm, and the slope should not higher than 45 degree. the top of the shaft should install air vent and the size should be larger then 1% of shaft horizontal section area.
10.in the shaft which contains several elevators, there should set obstacle between different moving parts. The obstacle should at least extend from the lowest spot to the height over 2.5m of the lowest floor of cabin, counterweight(or balancing weight). width should can prevent people from going one pit to the other pit(count by client)

Floor	Height(mm)

Mark	QTY	Sign	Date

Schumacher elevator (Zhangjiagang) Co., Ltd.

Design		Confirm		Civil engineering guidance	
Reviewer		Date		Drawing No.	SMKMG800B